	A	B	C	D	E	F	G	H	
42"	70	40	33	46	33	17 1/4	24 3/4	-----	
48"	76	46	36	50	41	26	24	2	C
54"	102	46	36	50	41	26	24	2	C
60"	114	69	45	72	72				

NOTE: DIMENSION 'A' ON VALVES WITH RAISED FACE FLANGES DOES NOT INCLUDE THE RAISED FACE HEIGHT.

REV	DESCRIPTION	DATE	BY
A	REDRAWN, ADDED 60" SIZE, PART NO. 37 WAS PART NO. 35A & ADDED PART NO. 50	8-16-01	HGM
B	REVISED PART NOS. 50 SEAT SEAL & 15A GLAND COVER	8-18-01	HGM
C	54"- B MAX 62, C MAX 40, D MAX 56, E MAX 60, F MAX 28, G MAX 33 & 48" H MAS 1" & 54" H MAS 2 1/4	2-5-08	HGM

NO.	PART NAMES
1	BODY
2	SEAT
3	DISC
3A	DISC HINGE PIN
4	DISC ARM
5	SEAT RING
5A	SEAT RING FOLLOWER
5B	SEAT RING FOLLOWER SCREWS
5C	SEAT RING RETAINING PIN
8	COVER GASKET
9	COVER
9A	DISC STOP
10	COVER BOLTS
11	SHAFT
12	DISC ARM SET SCREW
13	INNER SHAFT BUSHING
15	GLAND
16	GLAND STUDS
17	GLAND PACKING
19	COUNTERWEIGHT ARM
31	COUNTERWEIGHT
35	DISC HINGE BEARING
36	DISC HINGE CAP SCREWS
37	DISC HINGE DOWEL PINS
38	UPPER DISC GUIDE
39	LOWER DISC GUIDE
40	DISC GUIDE SCREWS
41	DISC HINGE PIN COTTER PIN
42	DISC HINGE PIN WASHERS
43	SHOCK ABSORBER
44	SHOCK ABSORBER MOUNTING BRACKET
45	SHOCK ABSORBER BRACKET MOUNTING BOLTS
46	SHOCK ABSORBER MOUNTING BOLTS
47	STRIKER PLATE
48	STRIKER PLATE JAM NUT
49	DISC ARM GIB HEAD KEY
50	COUNTERWEIGHT ARM KEYS
51	COUNTERWEIGHT RETAINER RING
52	COUNTERWEIGHT RETAINER PINS
53	COUNTERWEIGHT ARM SET SCREW
54	COUNTERWEIGHT RETAINER COTTER PINS
55	SHOCK ABSORBER MTG BRKT DOWEL PINS

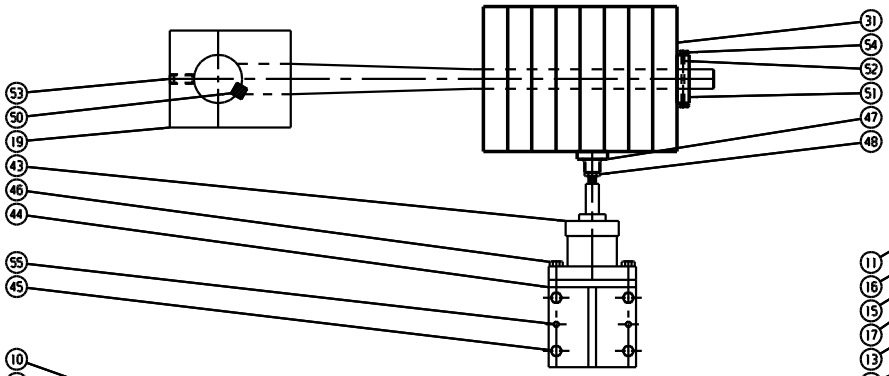

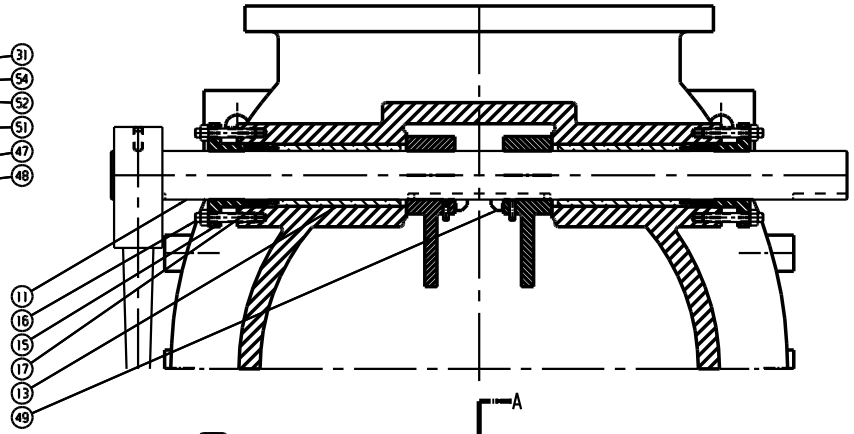

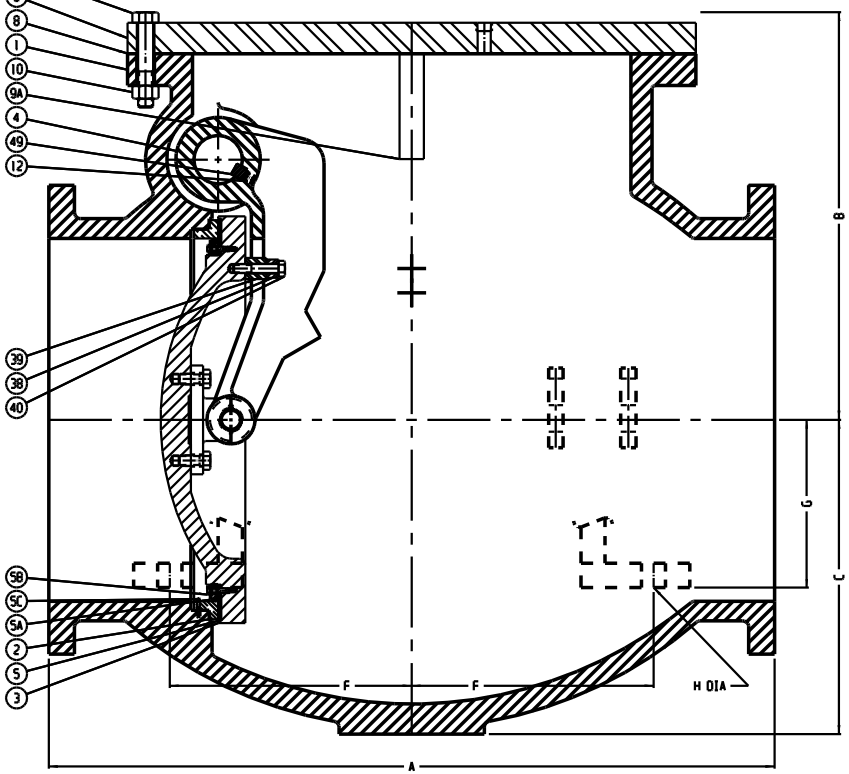

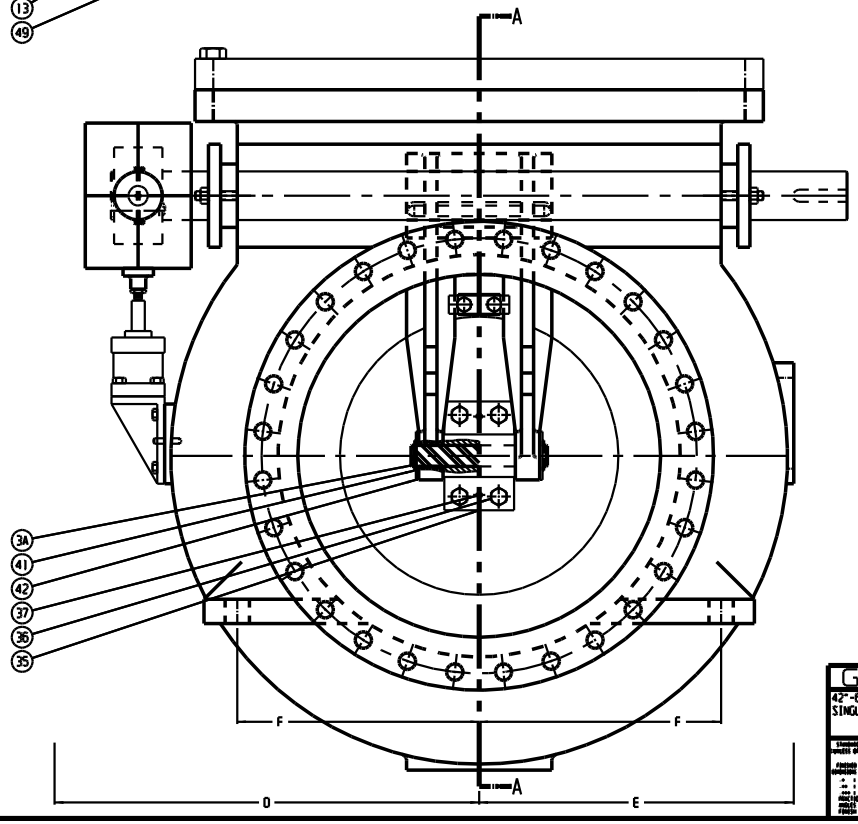

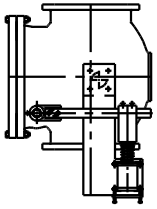

VERTICAL INSTALLATION

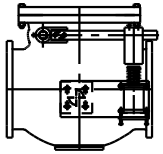

HORIZONTAL INSTALLATION

E:\GA-VALVES\GA-SWING-1029-C.PRT

GA INDUSTRIES, INC

42"-60" SWING CHECK VALVE
SINGLE SHOCK ABSORBER & COUNTERWEIGHT ARM

SERIAL NO.	SCALE NONE	DRAWN BY JEL	
		APPR. BY	
REFERENCES	EFFECTIVE DATE 11-1-77	ID	
REPLACES 9907	FIG. NUMBER 250-D & 250-DOC	FILE C	DRAWING NO. C-1029	REV C