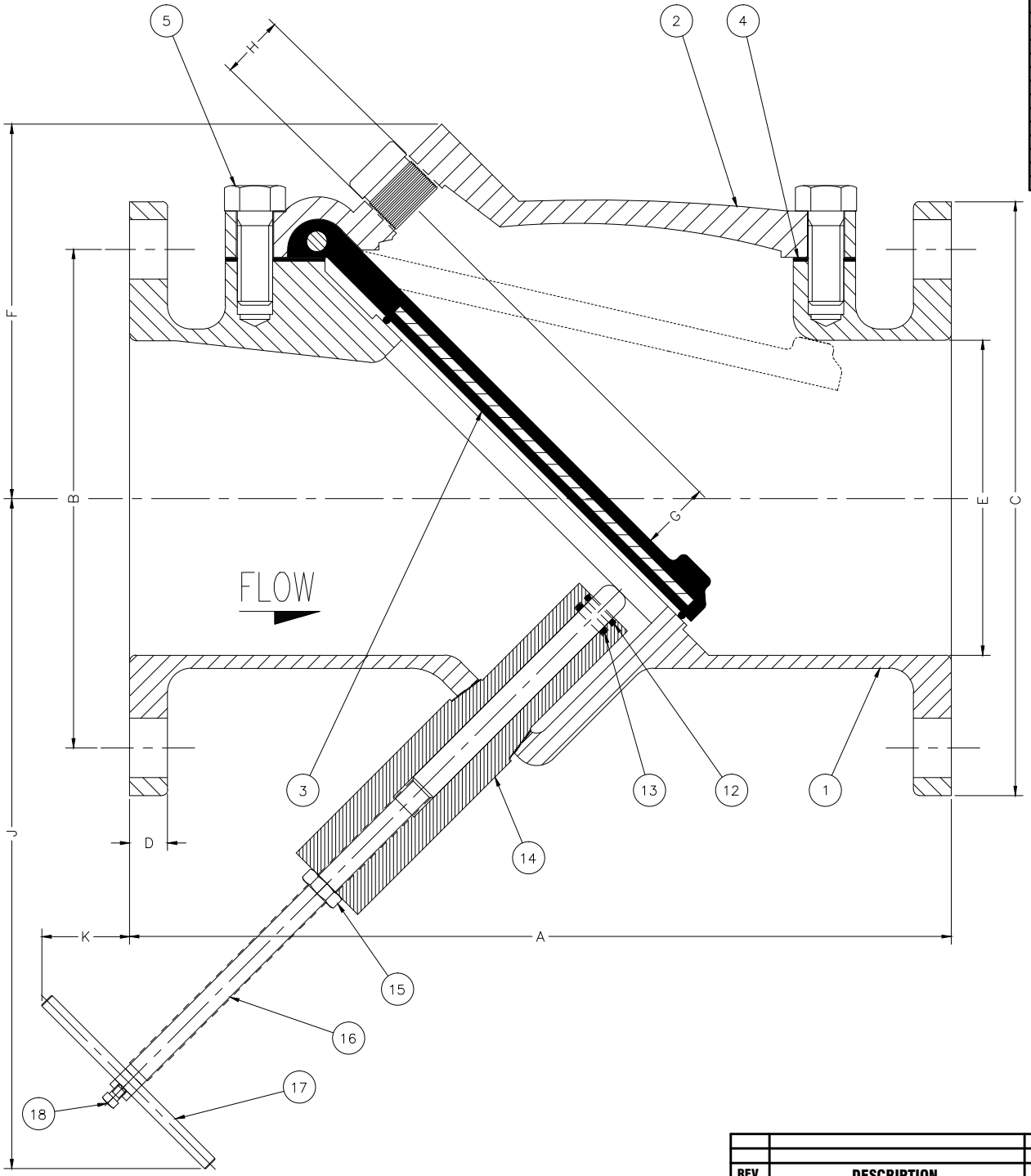

SIZE	A	B	C	D	E	F	BOLT SIZE	NO. OF BOLTS	G	H	J	K
2	8	4 3/4	6	5/8	2	3 3/8	5/8	4	1 1/2 ALL SIZES	1" ALL SIZES	7	0
2 1/2	8 1/2	5 1/2	7	11/16	2 1/2	3 3/8	5/8	4			7	0
3	9 1/2	6	7 1/2	3/4	3	5 1/8	5/8	4			8	0
4	11 1/2	7 1/2	9	15/16	4	5 3/4	5/8	8			8	2
6	15	9 1/2	11	1	6	6 7/8	3/4	8			13	2
8	19 1/2	11 3/4	13 1/2	1 1/8	8	8 3/8	3/4	8			17	3
10	24 1/2	14 1/4	16	1 3/16	10	10 3/4	7/8	12			20	4
12	27 1/2	17	19	1 1/4	12	12 1/2	7/8	12			23	4
14	31	18 3/4	21	1 3/8	14	13	1	12			27	4
16	32	21 1/4	23 1/2	1 7/16	16	14 1/4	1	16			31	5
18	36	22 3/4	25	1 9/16	18	15 1/4	1 1/8	16			34	6
20	40	25	27 1/2	1 11/16	20	16 7/8	1 1/8	20			38	6
24	48	28 1/2	32	1 7/8	24	19 1/4	1 1/4	20			45	7

BILL OF MATERIALS

No.	DESCRIPTION	QTY.	MATERIAL
1	BODY	1	DUCTILE IRON
2	COVER	1	DUCTILE IRON
3	DISC	1	RUBBER COATED STL
4	GASKET	1	NBR
5	COVER BOLTS	VARIES PER VALVE SIZE	SST
12	ROD WIPER	1	URETHANE RUBBER
13	ROD SEAL	1	BUNA-N RUBBER
14	BACKFLOW TUBE	1	BRASS
15	BACKFLOW JAM NUT	1	SST
16	BACKFLOW ROD	1	SST
17	BACKFLOW ROD HANDLE	1	SST
18	BACKFLOW ROD SET SCREW	1	SST

J:\AUTOCAD\GA-VALVE\GA-SHOW\C-1398.DWG

GA INDUSTRIES, LLC

2"-24" RUBBER FLAPPER SWING CHECK VALVE W/BACKFLOW ACTUATOR (125# ANSI FLANGES)

REV.	DESCRIPTION	DATE	BY

STANDARD TOLERANCES (UNLESS OTHERWISE NOTED)
FINISHED SURFACES ONLY
DIMENSIONS SHOWN IN INCHES
.x = ±.02
.xx = ±.01
.xxx = ±.002
FRACTIONS ±1/64"
ANGLES ±1°
FINISH 8√- XX RMS

SERIAL NO.	SCALE NONE		DRAWN BY SWR	
			APPR. BY JT	
REFERENCES	EFFECTIVE DATE 12-11-2009 TO			
	FIG. NUMBER 200-DBF	FILE C	DRAWING NO. C-1398	REV.

AVAILABLE IN SIZES I AND III