DIMENSIONS										
VALVE SIZE	3" x 4"		4" x 6"		6" x 8"		8" x 10"		10" x 12"	
	in.	mm	in.	mm	in.	mm	in.	mm	in.	mm
A	12	305	13	330	17 1/2	445	18	457	23	584
B	7	178	8 1/2	216	9	229	12	305	14	356
C	5	127	5	127	6	152	9	229	9	229
D	10	254	11	279	12	305	14	356	15	381
E	5	127	5	127	7	178	8	203	9	229

NO.	PART NAMES	NO.	PART NAMES
1	BODY	15	GLAND
2	BODY SEAT	16	GLAND STUDS
2A	SEAT O-RING	17	GLAND PACKING
2B	SEAT PIN	18	SHAFT LOCK PIN
3	DISC & CENTER PIN	19	DISC ARM KEY
4	DISC ARM	33	COVER PLUG
5A	RENEWABLE SEAT	34	SHAFT END PLATE
5B	SEAT FOLLOWER	35	SHAFT END PLATE BOLTS
5C	SEAT SCREWS	36	SHAFT END PLATE SEAL
6	DISC NUT	50	SPRING MOUNTING BRACKET
6A	DISC NUT WASHER	51	SPRING MOUNTING BRACKET BOLTS
6B	DISC NUT PIN	52	SPRING
8	COVER GASKET	53	EYEBOLT
9	COVER	54	NUT
10	COVER BOLTS	55	SPRING ARM
11	SHAFT	56	SPRING ARM KEY
12	DISC ARM SET SCREWS	57	SPRING ARM SET SCREW
13	INNER BUSHING	58	SPRING BRACKET PINS
14	OUTER BUSHING		

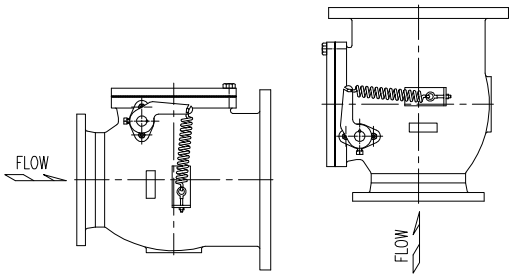

HORIZONTAL INSTALLATION

VERTICAL INSTALLATION

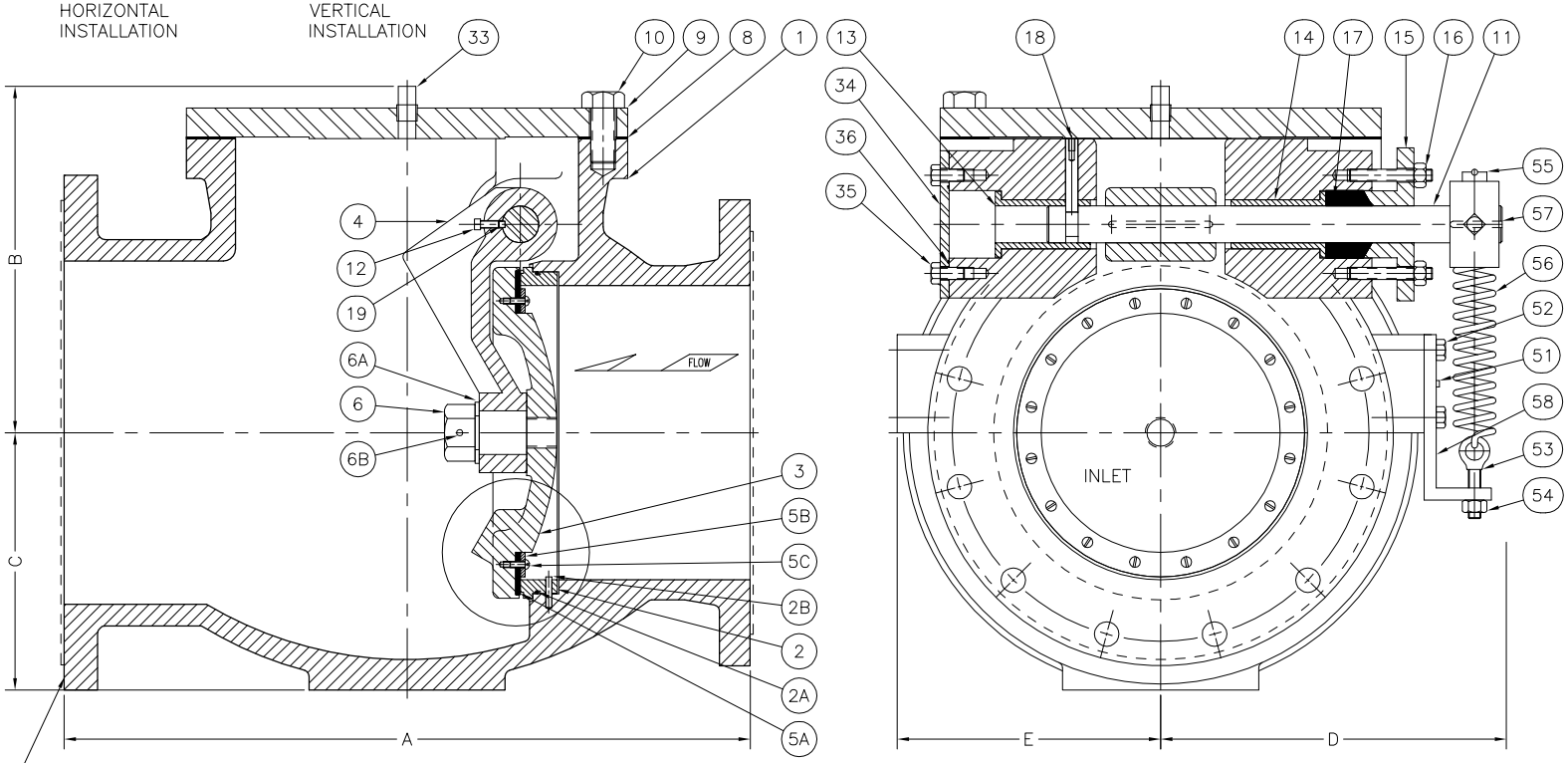

NOTE:
"A" DIMENSION ON VALVES WITH RAISED FACE FLANGES DOES NOT INCLUDE THE RAISED FACE HEIGHT

J:\GA-VALVE\GA-DETAIL\C-1307-C.DWG

GA INDUSTRIES

3x4"–10x12" FIGURE 231 SWING CHECK VALVE
SINGLE INCREASING LEVER & SPRING
GENERAL ARRANGEMENT & DIMENSIONS

STANDARD TOLERANCES (UNLESS OTHERWISE NOTED)
FINISHED SURFACES ONLY
DIMENSIONS SHOWN IN INCHES
.x = ±.02
.xx = ±.01
.xxx = ±.002
FRACTIONS ±1/64"
ANGLES ±1°
FINISH 8/- XX RMS

SERIAL NO.	SCALE	DRAWN BY	
*	NTS	DAB	
		APPR. BY	JJF
REFERENCES	EFFECTIVE DATE 14–29–1999 TO		
*	FIG. NUMBER: SEE CHART	FILE: C	DRAWING NO.: C–1307
			REV.: C

REV.	DESCRIPTION	DATE	BY
C	REVISED TITLEBLOCK	05-30-2019	JT
B	REMOVED 12" AND LARGER	08-10-2018	JH
A	REDRAWN ON AUTO CAD	12-07-2010	HGM