VALVE SIZE	A		B	C		D1	D2	E		F		G		H	J	K	EST. WT.
	125#	250#		125#	250#			125#	250#	125#	250#	125#	250#				
6	11	12 1/2	15 1/2	1	1 7/16	7	7	9 1/2	10 5/8	8	12	7/8	7/8	11 1/2	5 1/2	5 1/2	120#
8	13 1/2	15	17 1/2	1 1/8	1 5/8	9 1/2	9 1/2	11 3/4	13	8	12	7/8	1	14 3/4	7 3/16	7 3/16	280#
10	16	17 1/2	24 1/2	1 3/16	1 7/8	9 3/4	9 3/4	14 1/4	15 1/4	12	16	1	1 1/8	17	8 1/4	8 1/4	460#
12	19	20 1/2	24	1 1/4	2	12 1/2	12 1/2	17	17 3/4	12	16	1	1 1/4	21	10	10	650#
14	21	23	31	1 3/8	2 1/8	13	13	18 3/4	20 1/4	12	20	1 1/8	1 1/4	22 5/8	10 3/4	10 3/4	860#

FLANGES PER ANSI B16.1

NOTE:
"B" DIMENSION ON VALVES WITH RAISED FACE
FLANGES DOES NOT INCLUDE THE RAISED FACE HEIGHT

ITEM	DESCRIPTION
1	INLET BODY SECTION
2	OUTLET BODY SECTION
3	DISC
3A	DISC STRIKER PLATE
3B	DISC STRIKER PLATE SCREWS
3C	DISC STRIKER PLATE SPACER
4	SEAT RING
5	SEAT RING SEALS
6	BODY BOLTS
11	PIVOT PIN
12	PIVOT PIN SEAL
13	END PLATE
14	END PLATE BOLTS
15	INLET BODY SECTION INSPECTION COVER
16	INLET BODY SECTION INSPECTION COVER SEAL
17	INLET BODY SECTION INSPECTION COVER BOLTS
18	OUTLET BODY SECTION INSPECTION COVER
19	OUTLET BODY SECTION INSPECTION COVER SEAL
20	OUTLET BODY SECTION INSPECTION COVER BOLTS

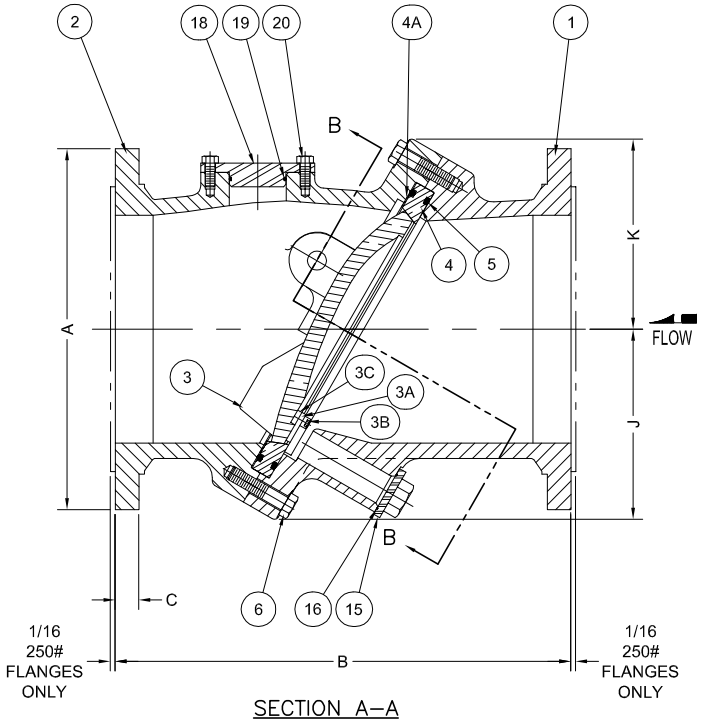

SECTION A–A

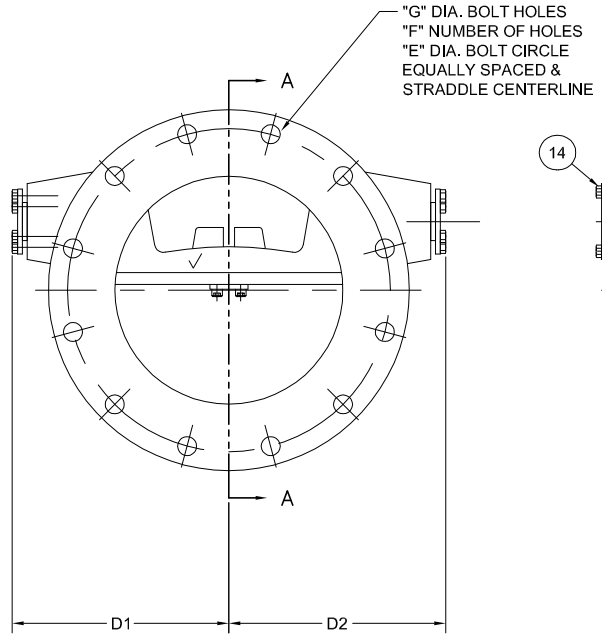

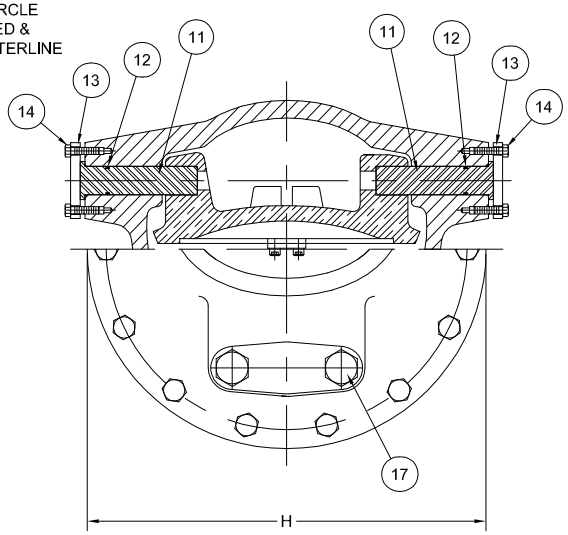

SECTION B–B

REV.	DESCRIPTION	DATE	BY
H	REVISED DIMENSIONS J & K	11–06–2013	RJT
G	ADDED SIZE 14"	08–04–2011	RJT
F	REMOVED SIZES 14"-24" (SEE DRAWING TD-1055) DISC/SEAT 2 PIECE	03–27–2009	HGM
E	REVISED SEAT RING CONFIGURATION	10–29–2003	MJB
D	ADDED ITEMS 3A, 3B, 3C & 4A	06–26–2003	MJB
C	ADDED 6" VALVE SIZE	12–10–2001	MJB
B	REVISED INLET INSPECTION PLUG CONFIGURATION	07–10–1998	MJB
A	ADDED 18"-24' VALVES; REVISED "B" DIM.	04–22–1998	MJB

GA INDUSTRIES, LLC

6" - 14" TILTING DISC CHECK VALVE ASSY
w/ INLET & OUTLET BODY SECTION
INSPECTION PORTS

DIMENSIONS IN INCHES
STANDARD TOLERANCES (UNLESS OTHERWISE NOTED)
.X = ±.1
.XX = ±.01
.XXX = ±.005
FRACTIONS = ±1/64
ANGLES = ±1°
DRAFT = 3° MAX
CASTING STOCK MINIMUM (SMALLEST DIM.-TO SURFACE)
0 TO <1 = 1/8
1 TO <6 = 3/16
6 TO <12 = 1/4
12 AND > = 3/8
PER ANSI Y14.5M ODST <3/72 FLATNESS, ROUNDNESS, POSITION

SERIAL NO. *		DRAWN BY MJB	
FIG. NUMBER 7125		APPR. BY JJF	
DATE *		SCALE NTS	
PROPERTY OF GA INDUSTRIES, LLC			
REFERENCES	FILE	DRAWING NO.	REV.
*	TD	TD-1003	H

J:\Autocad\Tilting-Disc\TD-Show\TD-1003-H.dwg