VALVE SIZE	A		B	C		D1	D2	E		F		G		H	J	K	EST. WT.
	125#	250#		125#	250#			125#	250#	125#	250#	125#	250#				
16	23 1/2	25 1/2	30	1 7/16	2 1/4	14 1/4	14 1/4	21 1/4	22 1/2	16	20	1 1/8	1 3/8	25	12 9/16	12 9/16	1140#
18	25	28	33	1 9/16	2 3/8	15 1/4	15 1/4	22 3/4	24 3/4	16	24	1 1/4	1 3/8	27 1/4	13 1/8	13 1/8	1360#
20	27 1/2	30 1/2	32	1 11/16	2 1/2	17	17	25	27	20	24	1 1/4	1 3/8	30	14 1/4	14 1/4	1620#
24	32	36	38	1 7/8	2 3/4	18 1/4	18 1/4	29 1/2	32	20	24	1 3/8	1 5/8	35	16 7/16	16 7/16	2040#
30	38 3/4	43	52	2 1/8	2 15/16	24	24	36	39 1/4	28	28	1 3/8	2	52 1/2	22 7/8	22 7/8	4200#
36	46	50	59 1/2	2 3/8	3 5/16	26 1/2	26 1/2	42 3/4	46	32	32	1 5/8	2 1/4	52	25	25	6200#
42	53	57	60	2 5/8	3 11/16	30	30	49 1/2	52 3/4	36	36	1 5/8	2 1/4	60	27 3/4	27 3/4	8400#

FLANGES PER ANSI B16.1

NOTE:
"B" DIMENSION ON VALVES WITH RAISED FACE
FLANGES DOES NOT INCLUDE THE RAISED FACE HEIGHT

ITEM	DESCRIPTION
1	INLET BODY SECTION
2	OUTLET BODY SECTION
3	DISC
3A	DISC STRIKER PLATE
3B	DISC STRIKER PLATE SCREWS
3C	DISC STRIKER PLATE SPACER
4	SEAT RING
5	SEAT RING SEALS
6	BODY BOLTS
11	PIVOT PIN
12	PIVOT PIN SEAL
13	END PLATE
14	END PLATE BOLTS
15	INLET BODY SECTION INSPECTION COVER
16	INLET BODY SECTION INSPECTION COVER SEAL
17	INLET BODY SECTION INSPECTION COVER BOLTS
18	OUTLET BODY SECTION INSPECTION COVER
19	OUTLET BODY SECTION INSPECTION COVER SEAL
20	OUTLET BODY SECTION INSPECTION COVER BOLTS
21	DISC SEAT
22	DISC SEAT SEAL
23	DISC SEAT SCREWS
24	DISC BUSHING

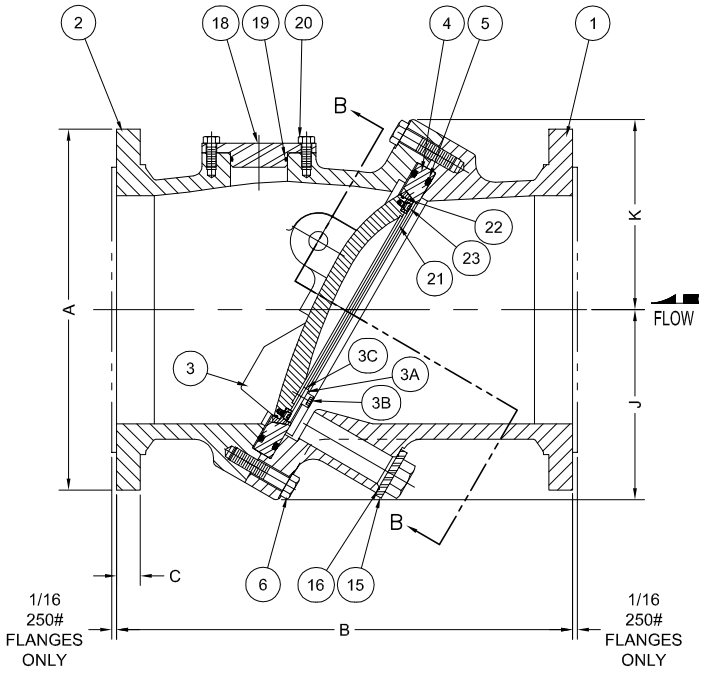

SECTION A–A

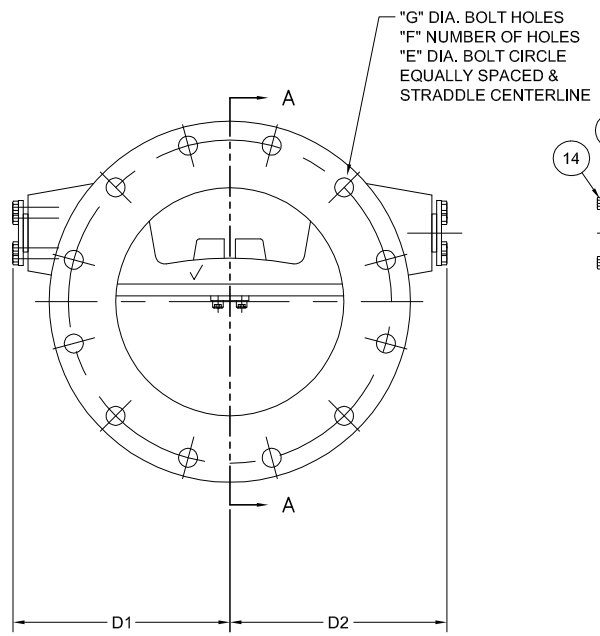

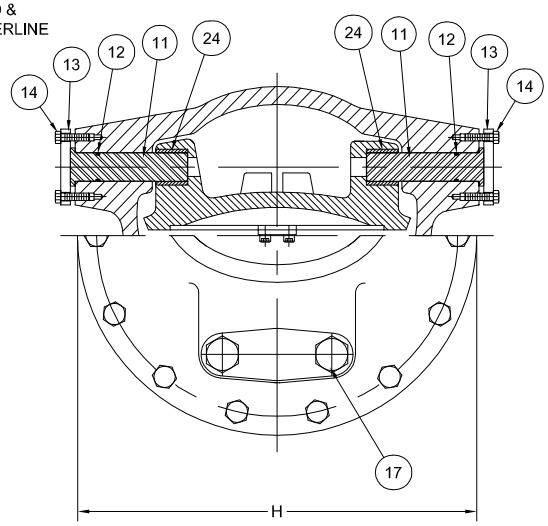

SECTION B–B

REV.	DESCRIPTION	DATE	BY
A	REVISED DIMENSIONS J & K	11-06-2013	BRF
A	DELETED 14" SIZE, ADDED 30"-42" SIZES	08-04-2011	RJT

GA INDUSTRIES, LLC

16" - 42" TILTING DISC CHECK VALVE ASSY
w/ INLET & OUTLET BODY SECTION
INSPECTION PORTS

DIMENSIONS IN INCHES
STANDARD TOLERANCES (UNLESS OTHERWISE NOTED)
.X = ±.1
.XX = ±.01
.XXX = ±.005
FRACTIONS = ±1/64
ANGLES = ±1°
DRAFTS: 3° MAX
CASTING STOCK MINIMUM (SMALLEST DIM. TO SURFACE)
0 TO <1 = 1/8
1 TO <6 = 3/16
6 TO <12 = 1/4
12 AND > = 3/8
PER ANSI Y14.5M-1994 -3172 FLATNESS, ROUNDNESS, POSITION

SERIAL NO.		DRAWN BY HGM	
FIG. NUMBER 7125		APPR. BY JT	
DATE 03-27-2009		SCALE NTS	
PROPERTY OF GA INDUSTRIES, LLC			
REFERENCES	FILE TD	DRAWING NO. TD-1055	REV. B

J:\Autocad\Tilting-Disc\TD-Show\TD-1055-B.dwg